CP violation in η muonic decays

based on JHEP 1901 (2019) 031

Pablo Sanchez-Puertas
psanchez@ifae.es

Institut de Física d'Altes Energies

EXCELENCIA SEVERO OCHOA

BIST Barcelona Institute of Science and Technology

Motivations (I)

- Not enough CP-violation for matter-antimatter asymmetry
- Expected additional (non-negligible) CP-violation sources
- The η meson is a flavor singlet: CP eigenstate and SM "background-free"

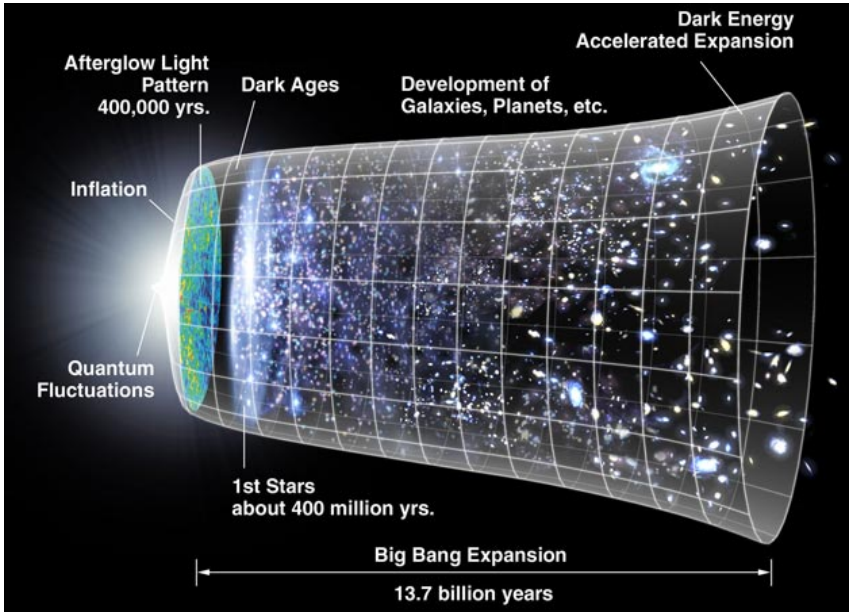

Motivations (II)

Provide MCs and estimates for proposed experiments sensitivites

- REDTOP: an η factory (10^{13} η mesons)
- Proposed @FLab (queuing), then @CERN
- Aimed to measure CP-violation BSM
- Measures the polarization of muons

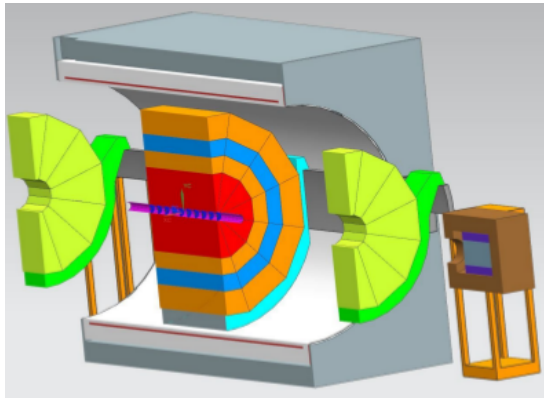

Provide MC amplitudes and asses existing bounds (nEDMs)

Outline

1. New physics: SMEFT and hadronization details
2. CP asymmetries and sensitivities
   - 2.1 $\eta \to \mu^+\mu^-$
   - 2.2 $\eta \to \gamma\mu^+\mu^-$
   - 2.3 $\eta \to \mu^+\mu^- e^+ e^-$
3. nEDM bounds
4. $D_s \to \ell\nu$ bounds
5. Conclusions and outlook

Section 1

New physics: SMEFT and hadronization details

SMEFT: CP-violating operators of interest (I)

Assume heavy physics: SMEFT + low energies: γ, G, ℓ (no, W, φ)

X^3		φ^6 and $\varphi^4 D^2$		$\psi^2\varphi^3$	
Q_G	$f^{ABC} G_\mu^{A\nu} G_\nu^{B\rho} G_\rho^{C\mu}$	Q_φ	$(\varphi^\dagger\varphi)^3$	$Q_{e\varphi}$	$(\varphi^\dagger\varphi)(\bar l_p e_r \varphi)$
$Q_{\widetilde G}$	$f^{ABC} \widetilde G_\mu^{A\nu} G_\nu^{B\rho} G_\rho^{C\mu}$	$Q_{\varphi\Box}$	$(\varphi^\dagger\varphi)\Box(\varphi^\dagger\varphi)$	$Q_{u\varphi}$	$(\varphi^\dagger\varphi)(\bar q_p u_r \widetilde\varphi)$
Q_W	$\varepsilon^{IJK} W_\mu^{I\nu} W_\nu^{J\rho} W_\rho^{K\mu}$	$Q_{\varphi D}$	$\left(\varphi^\dagger D^\mu\varphi\right)^\star \left(\varphi^\dagger D_\mu\varphi\right)$	$Q_{d\varphi}$	$(\varphi^\dagger\varphi)(\bar q_p d_r \varphi)$
$Q_{\widetilde W}$	$\varepsilon^{IJK} \widetilde W_\mu^{I\nu} W_\nu^{J\rho} W_\rho^{K\mu}$				

$X^2\varphi^2$		$\psi^2 X\varphi$		$\psi^2\varphi^2 D$	
$Q_{\varphi G}$	$\varphi^\dagger\varphi\, G^A_{\mu\nu} G^{A\mu\nu}$	Q_{eW}	$(\bar l_p \sigma^{\mu\nu} e_r)\tau^I \varphi W^I_{\mu\nu}$	$Q_{\varphi l}^{(1)}$	$(\varphi^\dagger i\overleftrightarrow{D}_\mu \varphi)(\bar l_p \gamma^\mu l_r)$
$Q_{\varphi\widetilde G}$	$\varphi^\dagger\varphi\, \widetilde G^A_{\mu\nu} G^{A\mu\nu}$	Q_{eB}	$(\bar l_p \sigma^{\mu\nu} e_r)\varphi B_{\mu\nu}$	$Q_{\varphi l}^{(3)}$	$(\varphi^\dagger i\overleftrightarrow{D}^I_\mu \varphi)(\bar l_p \tau^I \gamma^\mu l_r)$
$Q_{\varphi W}$	$\varphi^\dagger\varphi\, W^I_{\mu\nu} W^{I\mu\nu}$	Q_{uG}	$(\bar q_p \sigma^{\mu\nu} T^A u_r)\widetilde\varphi\, G^A_{\mu\nu}$	$Q_{\varphi e}$	$(\varphi^\dagger i\overleftrightarrow{D}_\mu \varphi)(\bar e_p \gamma^\mu e_r)$
$Q_{\varphi\widetilde W}$	$\varphi^\dagger\varphi\, \widetilde W^I_{\mu\nu} W^{I\mu\nu}$	Q_{uW}	$(\bar q_p \sigma^{\mu\nu} u_r)\tau^I \widetilde\varphi\, W^I_{\mu\nu}$	$Q_{\varphi q}^{(1)}$	$(\varphi^\dagger i\overleftrightarrow{D}_\mu \varphi)(\bar q_p \gamma^\mu q_r)$
$Q_{\varphi B}$	$\varphi^\dagger\varphi\, B_{\mu\nu} B^{\mu\nu}$	Q_{uB}	$(\bar q_p \sigma^{\mu\nu} u_r)\widetilde\varphi\, B_{\mu\nu}$	$Q_{\varphi q}^{(3)}$	$(\varphi^\dagger i\overleftrightarrow{D}^I_\mu \varphi)(\bar q_p \tau^I \gamma^\mu q_r)$
$Q_{\varphi\widetilde B}$	$\varphi^\dagger\varphi\, \widetilde B_{\mu\nu} B^{\mu\nu}$	Q_{dG}	$(\bar q_p \sigma^{\mu\nu} T^A d_r)\varphi\, G^A_{\mu\nu}$	$Q_{\varphi u}$	$(\varphi^\dagger i\overleftrightarrow{D}_\mu \varphi)(\bar u_p \gamma^\mu u_r)$
$Q_{\varphi WB}$	$\varphi^\dagger\tau^I\varphi\, W^I_{\mu\nu} B^{\mu\nu}$	Q_{dW}	$(\bar q_p \sigma^{\mu\nu} d_r)\tau^I \varphi\, W^I_{\mu\nu}$	$Q_{\varphi d}$	$(\varphi^\dagger i\overleftrightarrow{D}_\mu \varphi)(\bar d_p \gamma^\mu d_r)$
$Q_{\varphi\widetilde WB}$	$\varphi^\dagger\tau^I\varphi\, \widetilde W^I_{\mu\nu} B^{\mu\nu}$	Q_{dB}	$(\bar q_p \sigma^{\mu\nu} d_r)\varphi\, B_{\mu\nu}$	$Q_{\varphi ud}$	$i(\widetilde\varphi^\dagger D_\mu\varphi)(\bar u_p \gamma^\mu d_r)$

CP-V@hadronic level CP-V@leptonic-quark level CP-V@leptonic level

SMEFT: CP-violating operators of interest (I)

Assume heavy physics: SMEFT + low energies: γ, G, ℓ (no, W, φ)

X^3		φ^6 and $\varphi^4 D^2$		$\psi^2\varphi^3$	
Q_G	$f^{ABC} G_\mu^{A\nu} G_\nu^{B\rho} G_\rho^{C\mu}$	Q_φ	$(\varphi^\dagger\varphi)^3$	$Q_{e\varphi}$	$(\varphi^\dagger\varphi)(\bar l_p e_r \varphi)$
$Q_{\widetilde G}$	$f^{ABC} \widetilde G_\mu^{A\nu} G_\nu^{B\rho} G_\rho^{C\mu}$	$Q_{\varphi\Box}$	$(\varphi^\dagger\varphi)\Box(\varphi^\dagger\varphi)$	$Q_{u\varphi}$	$(\varphi^\dagger\varphi)(\bar q_p u_r \widetilde\varphi)$
Q_W	$\varepsilon^{IJK} W_\mu^{I\nu} W_\nu^{J\rho} W_\rho^{K\mu}$	$Q_{\varphi D}$	$(\varphi^\dagger D^\mu\varphi)^\star (\varphi^\dagger D_\mu\varphi)$	$Q_{d\varphi}$	$(\varphi^\dagger\varphi)(\bar q_p d_r \varphi)$
$Q_{\widetilde W}$	$\varepsilon^{IJK} \widetilde W_\mu^{I\nu} W_\nu^{J\rho} W_\rho^{K\mu}$				

electron EDM

$X^2\varphi^2$		$\psi^2 X\varphi$		$\psi^2\varphi^2 D$	
$Q_{\varphi G}$	$\varphi^\dagger\varphi\, G^A_{\mu\nu} G^{A\mu\nu}$	Q_{eW}	$(\bar l_p \sigma^{\mu\nu} e_r)\tau^I \varphi W^I_{\mu\nu}$	$Q_{\varphi l}^{(1)}$	$(\varphi^\dagger i\overleftrightarrow{D}_\mu \varphi)(\bar l_p \gamma^\mu l_r)$
$Q_{\varphi\widetilde G}$	$\varphi^\dagger\varphi\, \widetilde G^A_{\mu\nu} G^{A\mu\nu}$	Q_{eB}	$(\bar l_p \sigma^{\mu\nu} e_r)\varphi B_{\mu\nu}$	$Q_{\varphi l}^{(3)}$	$(\varphi^\dagger i\overleftrightarrow{D}^I_\mu \varphi)(\bar l_p \tau^I \gamma^\mu l_r)$
$Q_{\varphi W}$	$\varphi^\dagger\varphi\, W^I_{\mu\nu} W^{I\mu\nu}$	Q_{uG}	$(\bar q_p \sigma^{\mu\nu} T^A u_r)\widetilde\varphi\, G^A_{\mu\nu}$	$Q_{\varphi e}$	$(\varphi^\dagger i\overleftrightarrow{D}_\mu \varphi)(\bar e_p \gamma^\mu e_r)$
$Q_{\varphi\widetilde W}$	$\varphi^\dagger\varphi\, \widetilde W^I_{\mu\nu} W^{I\mu\nu}$	Q_{uW}	$(\bar q_p \sigma^{\mu\nu} u_r)\tau^I \widetilde\varphi\, W^I_{\mu\nu}$	$Q_{\varphi q}^{(1)}$	$(\varphi^\dagger i\overleftrightarrow{D}_\mu \varphi)(\bar q_p \gamma^\mu q_r)$
$Q_{\varphi B}$	$\varphi^\dagger\varphi\, B_{\mu\nu} B^{\mu\nu}$	Q_{uB}	$(\bar q_p \sigma^{\mu\nu} u_r)\widetilde\varphi\, B_{\mu\nu}$	$Q_{\varphi q}^{(3)}$	$(\varphi^\dagger i\overleftrightarrow{D}^I_\mu \varphi)(\bar q_p \tau^I \gamma^\mu q_r)$
$Q_{\varphi\widetilde B}$	$\varphi^\dagger\varphi\, \widetilde B_{\mu\nu} B^{\mu\nu}$	Q_{dG}	$(\bar q_p \sigma^{\mu\nu} T^A d_r)\varphi\, G^A_{\mu\nu}$	$Q_{\varphi u}$	$(\varphi^\dagger i\overleftrightarrow{D}_\mu \varphi)(\bar u_p \gamma^\mu u_r)$
$Q_{\varphi WB}$	$\varphi^\dagger\tau^I\varphi\, W^I_{\mu\nu} B^{\mu\nu}$	Q_{dW}	$(\bar q_p \sigma^{\mu\nu} d_r)\tau^I \varphi\, W^I_{\mu\nu}$	$Q_{\varphi d}$	$(\varphi^\dagger i\overleftrightarrow{D}_\mu \varphi)(\bar d_p \gamma^\mu d_r)$
$Q_{\varphi\widetilde WB}$	$\varphi^\dagger\tau^I\varphi\, \widetilde W^I_{\mu\nu} B^{\mu\nu}$	Q_{dB}	$(\bar q_p \sigma^{\mu\nu} d_r)\varphi\, B_{\mu\nu}$	$Q_{\varphi ud}$	$i(\widetilde\varphi^\dagger D_\mu\varphi)(\bar u_p \gamma^\mu d_r)$

muon EDM

CP-V@hadronic level CP-V@leptonic-quark level CP-V@leptonic level

SMEFT: CP-violating operators of interest (II)

Assume heavy physics: SMEFT + low energies: γ, G, ℓ (no, W, φ)

$(\bar{L}L)(\bar{L}L)$		$(\bar{R}R)(\bar{R}R)$		$(\bar{L}L)(\bar{R}R)$	
Q_{ll}	$(\bar{l}_p\gamma_\mu l_r)(\bar{l}_s\gamma^\mu l_t)$	Q_{ee}	$(\bar{e}_p\gamma_\mu e_r)(\bar{e}_s\gamma^\mu e_t)$	Q_{le}	$(\bar{l}_p\gamma_\mu l_r)(\bar{e}_s\gamma^\mu e_t)$
$Q_{qq}^{(1)}$	$(\bar{q}_p\gamma_\mu q_r)(\bar{q}_s\gamma^\mu q_t)$	Q_{uu}	$(\bar{u}_p\gamma_\mu u_r)(\bar{u}_s\gamma^\mu u_t)$	Q_{lu}	$(\bar{l}_p\gamma_\mu l_r)(\bar{u}_s\gamma^\mu u_t)$
$Q_{qq}^{(3)}$	$(\bar{q}_p\gamma_\mu\tau^I q_r)(\bar{q}_s\gamma^\mu\tau^I q_t)$	Q_{dd}	$(\bar{d}_p\gamma_\mu d_r)(\bar{d}_s\gamma^\mu d_t)$	Q_{ld}	$(\bar{l}_p\gamma_\mu l_r)(\bar{d}_s\gamma^\mu d_t)$
$Q_{lq}^{(1)}$	$(\bar{l}_p\gamma_\mu l_r)(\bar{q}_s\gamma^\mu q_t)$	Q_{eu}	$(\bar{e}_p\gamma_\mu e_r)(\bar{u}_s\gamma^\mu u_t)$	Q_{qe}	$(\bar{q}_p\gamma_\mu q_r)(\bar{e}_s\gamma^\mu e_t)$
$Q_{lq}^{(3)}$	$(\bar{l}_p\gamma_\mu\tau^I l_r)(\bar{q}_s\gamma^\mu\tau^I q_t)$	Q_{ed}	$(\bar{e}_p\gamma_\mu e_r)(\bar{d}_s\gamma^\mu d_t)$	$Q_{qu}^{(1)}$	$(\bar{q}_p\gamma_\mu q_r)(\bar{u}_s\gamma^\mu u_t)$
		$Q_{ud}^{(1)}$	$(\bar{u}_p\gamma_\mu u_r)(\bar{d}_s\gamma^\mu d_t)$	$Q_{qu}^{(8)}$	$(\bar{q}_p\gamma_\mu T^A q_r)(\bar{u}_s\gamma^\mu T^A u_t)$
		$Q_{ud}^{(8)}$	$(\bar{u}_p\gamma_\mu T^A u_r)(\bar{d}_s\gamma^\mu T^A d_t)$	$Q_{qd}^{(1)}$	$(\bar{q}_p\gamma_\mu q_r)(\bar{d}_s\gamma^\mu d_t)$
				$Q_{qd}^{(8)}$	$(\bar{q}_p\gamma_\mu T^A q_r)(\bar{d}_s\gamma^\mu T^A d_t)$

$(\bar{L}R)(\bar{R}L)$ and $(\bar{L}R)(\bar{L}R)$		B-violating	
Q_{ledq}	$(\bar{l}_p^j e_r)(\bar{d}_s q_t^j)$	Q_{duq}	$\varepsilon^{\alpha\beta\gamma}\varepsilon_{jk}\left[(d_p^\alpha)^T C u_r^\beta\right]\left[(q_s^{\gamma j})^T C l_t^k\right]$
$Q_{quqd}^{(1)}$	$(\bar{q}_p^j u_r)\varepsilon_{jk}(\bar{q}_s^k d_t)$	Q_{qqu}	$\varepsilon^{\alpha\beta\gamma}\varepsilon_{jk}\left[(q_p^{\alpha j})^T C q_r^{\beta k}\right]\left[(u_s^\gamma)^T C e_t\right]$
$Q_{quqd}^{(8)}$	$(\bar{q}_p^j T^A u_r)\varepsilon_{jk}(\bar{q}_s^k T^A d_t)$	$Q_{qqq}^{(1)}$	$\varepsilon^{\alpha\beta\gamma}\varepsilon_{jk}\varepsilon_{mn}\left[(q_p^{\alpha j})^T C q_r^{\beta k}\right]\left[(q_s^{\gamma m})^T C l_t^n\right]$
$Q_{lequ}^{(1)}$	$(\bar{l}_p^j e_r)\varepsilon_{jk}(\bar{q}_s^k u_t)$	$Q_{qqq}^{(3)}$	$\varepsilon^{\alpha\beta\gamma}(\tau^I\varepsilon)_{jk}(\tau^I\varepsilon)_{mn}\left[(q_p^{\alpha j})^T C q_r^{\beta k}\right]\left[(q_s^{\gamma m})^T C l_t^n\right]$
$Q_{lequ}^{(3)}$	$(\bar{l}_p^j\sigma_{\mu\nu}e_r)\varepsilon_{jk}(\bar{q}_s^k\sigma^{\mu\nu}u_t)$	Q_{duu}	$\varepsilon^{\alpha\beta\gamma}\left[(d_p^\alpha)^T C u_r^\beta\right]\left[(u_s^\gamma)^T C e_t\right]$

CP-V@hadronic level CP-V@leptonic-quark level CP-V@leptonic level

SMEFT: Hadronization details

- Hadronic CP-violating (CP_{H}) terms: additional CP-violating $\eta \to \gamma^*\gamma^*$ TFFs

$$i\mathcal{M}^{\mu\nu} = ie^2\Big(\epsilon^{\mu\nu\rho\sigma} q_{1\rho} q_{2\sigma} F_{\eta\gamma^*\gamma^*}(q_1^2, q_2^2) + [g^{\mu\nu}(q_1 \cdot q_2) - q_2^\mu q_1^\nu]\, F^{CP1}_{\eta\gamma^*\gamma^*}(q_1^2, q_2^2)$$
$$+ \left[g^{\mu\nu} q_1^2 q_2^2 - q_1^2 q_2^\mu q_2^\nu - q_2^2 q_1^\mu q_1^\nu + (q_1 \cdot q_2) q_1^\mu q_2^\nu\right] F^{CP2}_{\eta\gamma^*\gamma^*}(q_1^2, q_2^2)\Big),$$

with $F_{\eta\gamma^*\gamma^*}(q_1^2, q_2^2)$ known and $F^{CP1,2}_{\eta\gamma^*\gamma^*}(q_1^2, q_2^2) \simeq \epsilon_{1,2} F_{\eta\gamma^*\gamma^*}(q_1^2, q_2^2)$ taken

SMEFT: Hadronization details

- Hadronic CP-violating ($CP_{\rm H}$) terms: additional CP-violating $\eta \to \gamma^*\gamma^*$ TFFs

$$i\mathcal{M}^{\mu\nu} = ie^2\Big(\epsilon^{\mu\nu\rho\sigma} q_{1\rho} q_{2\sigma} F_{\eta\gamma^*\gamma^*}(q_1^2, q_2^2) + [g^{\mu\nu}(q_1\cdot q_2) - q_2^\mu q_1^\nu]\, F^{CP1}_{\eta\gamma^*\gamma^*}(q_1^2, q_2^2)$$
$$+ \left[g^{\mu\nu} q_1^2 q_2^2 - q_1^2 q_2^\mu q_2^\nu - q_2^2 q_1^\mu q_1^\nu + (q_1\cdot q_2) q_1^\mu q_2^\nu\right] F^{CP2}_{\eta\gamma^*\gamma^*}(q_1^2, q_2^2)\Big),$$

with $F_{\eta\gamma^*\gamma^*}(q_1^2, q_2^2)$ known and $F^{CP1,2}_{\eta\gamma^*\gamma^*}(q_1^2, q_2^2) \simeq \epsilon_{1,2} F_{\eta\gamma^*\gamma^*}(q_1^2, q_2^2)$ taken

- Lepton-quark CP-violating ($CP_{\rm HL}$) terms ($\mathcal{O}^{(1)}_{lequ}, \mathcal{O}_{ledq}$;[$\mathcal{O}^{(3)}_{lequ}$])

$$\mathcal{O}^{(1)}_{\ell equ} = \frac{c^{(1)prst}_{\ell equ}}{v^2}(\bar{\ell}^j_p e_r)\epsilon_{jk}(\bar{q}^k_s u_t) \to -\frac{\mathrm{Im}\, c^{(1)prst}_{\ell equ}}{2v^2}\left[(\bar{e}i\gamma^5 e)(\bar{u}u) + (\bar{e}e)(\bar{u}i\gamma^5 u)\right]$$
$$\mathcal{O}_{\ell edq} = \frac{c^{prst}_{\ell edq}}{v^2}(\bar{\ell}^j_p e_r)(\bar{d}_s q^j_t) \qquad \to \frac{\mathrm{Im}\, c^{prst}_{\ell edq}}{2v^2}\left[(\bar{e}i\gamma^5 e)(\bar{d}d) - (\bar{e}e)(\bar{d}i\gamma^5 d)\right]$$

SMEFT: Hadronization details

- Hadronic CP-violating ($CP_{\rm H}$) terms: additional CP-violating $\eta \to \gamma^*\gamma^*$ TFFs

$$i\mathcal{M}^{\mu\nu} = ie^2\Big(\epsilon^{\mu\nu\rho\sigma} q_{1\rho} q_{2\sigma} F_{\eta\gamma^*\gamma^*}(q_1^2, q_2^2) + [g^{\mu\nu}(q_1\cdot q_2) - q_2^\mu q_1^\nu]\, F^{CP1}_{\eta\gamma^*\gamma^*}(q_1^2, q_2^2)$$
$$+ \left[g^{\mu\nu} q_1^2 q_2^2 - q_1^2 q_2^\mu q_2^\nu - q_2^2 q_1^\mu q_1^\nu + (q_1\cdot q_2) q_1^\mu q_2^\nu\right] F^{CP2}_{\eta\gamma^*\gamma^*}(q_1^2, q_2^2)\Big),$$

with $F_{\eta\gamma^*\gamma^*}(q_1^2, q_2^2)$ known and $F^{CP1,2}_{\eta\gamma^*\gamma^*}(q_1^2, q_2^2) \simeq \epsilon_{1,2} F_{\eta\gamma^*\gamma^*}(q_1^2, q_2^2)$ taken

- Lepton-quark CP-violating ($CP_{\rm HL}$) terms ($\mathcal{O}^{(1)}_{lequ}, \mathcal{O}_{ledq}; [\mathcal{O}^{(3)}_{lequ}]$)

$$\mathcal{L} = -\mathcal{C}(\eta \bar{e}^p e^r); \quad \mathcal{C} \equiv \frac{\text{Im}\, c_{\mathcal{O}}}{2v^2}\left[\langle 0|\, \bar{q}^a i\gamma^5 q^a\, |\eta\rangle \to \frac{F_\eta^q m_\pi^2\, \text{tr}(a\lambda^q) + F_\eta^s(2m_K^2 - m_\pi^2)\, \text{tr}(a\lambda^s)}{2m_a}\right] \sim 10^{-6}$$

SMEFT: Hadronization details

- Hadronic CP-violating ($CP_{\rm H}$) terms: additional CP-violating $\eta \to \gamma^*\gamma^*$ TFFs

$$i\mathcal{M}^{\mu\nu} = ie^2\Big(\epsilon^{\mu\nu\rho\sigma} q_{1\rho} q_{2\sigma} F_{\eta\gamma^*\gamma^*}(q_1^2, q_2^2) + [g^{\mu\nu}(q_1\cdot q_2) - q_2^\mu q_1^\nu]\, F^{CP1}_{\eta\gamma^*\gamma^*}(q_1^2, q_2^2)$$
$$+ \left[g^{\mu\nu} q_1^2 q_2^2 - q_1^2 q_2^\mu q_2^\nu - q_2^2 q_1^\mu q_1^\nu + (q_1\cdot q_2) q_1^\mu q_2^\nu\right] F^{CP2}_{\eta\gamma^*\gamma^*}(q_1^2, q_2^2)\Big),$$

with $F_{\eta\gamma^*\gamma^*}(q_1^2, q_2^2)$ known and $F^{CP1,2}_{\eta\gamma^*\gamma^*}(q_1^2, q_2^2) \simeq \epsilon_{1,2} F_{\eta\gamma^*\gamma^*}(q_1^2, q_2^2)$ taken

- Lepton-quark CP-violating ($CP_{\rm HL}$) terms ($\mathcal{O}^{(1)}_{lequ}, \mathcal{O}_{ledq}; [\mathcal{O}^{(3)}_{lequ}]$)

$$\mathcal{L} = -\mathcal{C}(\eta \bar{e}^p e^r); \quad \mathcal{C} \equiv \frac{\mathrm{Im}\, c_{\mathcal{O}}}{2v^2}\left[\langle 0|\, \bar{q}^a i\gamma^5 q^a\, |\eta\rangle \to \frac{F_\eta^q m_\pi^2\, \mathrm{tr}(a\lambda^q) + F_\eta^s(2m_K^2 - m_\pi^2)\, \mathrm{tr}(a\lambda^s)}{2m_a}\right] \sim 10^{-6}$$

- electron EDMs set strong bounds for $\mathcal{O}_{\ell e} \to$ assumed irrelevant

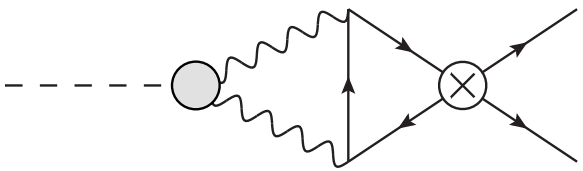

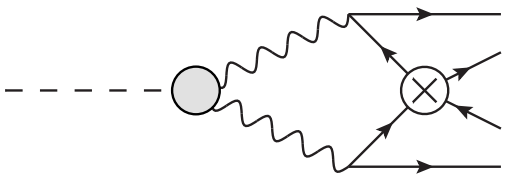

Section 2

CP asymmetries and sensitivities

$\eta \to \mu^+\mu^-$

- In the SM it is α^2, helicity-flip, and loop suppressed (interesting!)

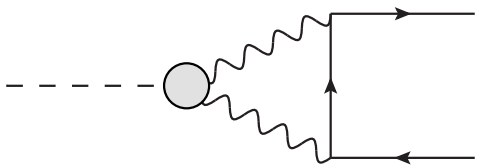

- The most general matrix element (CP-even and odd, resp.)

$$i\mathcal{M} = i\left[g_P(\bar{u}i\gamma^5 v) + g_S(\bar{u}v)\right],$$

- No asymmetry without considering polarizations (only for muons)

$$|\mathcal{M}(\lambda\boldsymbol{n},\bar{\lambda}\bar{\boldsymbol{n}})|^2 = \frac{m_\eta^2}{2}\Big[|g_P|^2\left(1-\lambda\bar{\lambda}[\boldsymbol{n}\cdot\bar{\boldsymbol{n}}]\right)+|g_S|^2\beta_\mu^2\left(1-\lambda\bar{\lambda}[n_z\bar{n}_z-n_T\cdot\bar{n}_T]\right)$$
$$+2\left[\lambda\bar{\lambda}\,\mathrm{Re}(g_P g_S^*)(\bar{\boldsymbol{n}}\times\boldsymbol{n})\cdot\boldsymbol{\beta}_\mu+\mathrm{Im}(g_P g_S^*)\boldsymbol{\beta}_\mu\cdot(\lambda\boldsymbol{n}-\bar{\lambda}\bar{\boldsymbol{n}})\right]\Big],$$

- Needs to compute g_S:

$CP_{\mathrm{H}} \sim \epsilon_i \times \mathrm{SM}$
$CP_{\mathrm{HL}} = -\mathcal{C}$ from $\mathcal{L} = -\mathcal{C}(\eta\bar{\mu}\mu)$

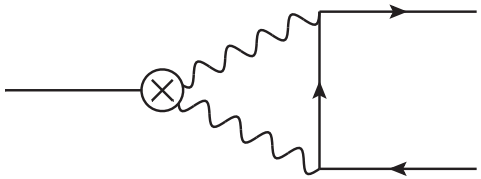

$\eta \to \mu^+\mu^-$

- Enough for MC (Geant4), but realistic estimate: how to measure polarization?

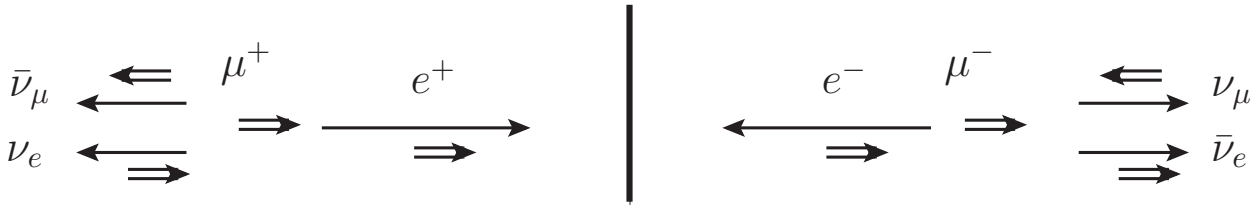

$\eta \to \mu^+\mu^-$

- Enough for MC (Geant4), but realistic estimate: how to measure polarization?

$$\mathrm{BR}(\mu^\pm, \lambda \boldsymbol{n}) = \frac{d\Omega}{4\pi} n(x) \left[1 \mp \lambda b(x, x_0) \boldsymbol{\beta} \cdot \boldsymbol{n}\right] dx,$$

with $x = 2E_e/m_\mu \in (0,1)$, $n(x) = 2x^2(3-2x)$ and $b(x) = (1-2x)/(3-2x)$.

$\eta \to \mu^+\mu^-$

- Enough for MC (Geant4), but realistic estimate: how to measure polarization?

$$\mathrm{BR}(\mu^\pm, \lambda \boldsymbol{n}) = \frac{d\Omega}{4\pi} n(x) \left[1 \mp \lambda b(x, x_0) \boldsymbol{\beta} \cdot \boldsymbol{n}\right] dx,$$

with $x = 2E_e/m_\mu \in (0,1)$, $n(x) = 2x^2(3-2x)$ and $b(x) = (1-2x)/(3-2x)$.

- The resulting decay width

$$|\mathcal{M}(\lambda \boldsymbol{n}, \bar{\lambda}\bar{\boldsymbol{n}})|^2 = \frac{m_\eta^2}{2}\Big[|g_P|^2\left(1 - \lambda\bar{\lambda}[\boldsymbol{n}\cdot\bar{\boldsymbol{n}}]\right) + |g_S|^2\beta_\mu^2\left(1 - \lambda\bar{\lambda}[n_z\bar{n}_z - n_T\cdot\bar{n}_T]\right)$$
$$+ 2\left[\lambda\bar{\lambda}\,\mathrm{Re}(g_P g_S^*)(\bar{\boldsymbol{n}}\times\boldsymbol{n})\cdot\boldsymbol{\beta}_\mu + \mathrm{Im}(g_P g_S^*)\boldsymbol{\beta}_\mu\cdot(\lambda\boldsymbol{n} - \bar{\lambda}\bar{\boldsymbol{n}})\right]\Big],$$

$\eta \to \mu^+\mu^-$

- Enough for MC (Geant4), but realistic estimate: how to measure polarization?

$$\mathrm{BR}(\mu^\pm, \lambda \boldsymbol{n}) = \frac{d\Omega}{4\pi} n(x) \left[1 \mp \lambda b(x, x_0) \boldsymbol{\beta} \cdot \boldsymbol{n}\right] dx,$$

with $x = 2E_e/m_\mu \in (0,1)$, $n(x) = 2x^2(3-2x)$ and $b(x) = (1-2x)/(3-2x)$.

- The resulting decay width

$$\frac{d\Gamma}{\Gamma_{\gamma\gamma}} = 2\beta_\mu \left(\frac{\alpha m_\mu}{\pi m_\eta}\right)^2 \Big[|\mathcal{A}|^2 \left(1 + b\bar{b}\left\{\boldsymbol{\beta}\cdot\bar{\boldsymbol{\beta}}\right\}\right) + 2\beta_\mu \tilde{g}_S \left\{ b\bar{b}[(\boldsymbol{\beta}\times\bar{\boldsymbol{\beta}})\cdot\hat{z}] \operatorname{Re}\mathcal{A} - (b\beta_z + \bar{b}\bar{\beta}_z) \operatorname{Im}\mathcal{A}\right\} + \tilde{g}_S^2 \left(1 + b\bar{b}\left\{\beta_z\bar{\beta}_z - \boldsymbol{\beta}_T\cdot\bar{\boldsymbol{\beta}}_T\right\}\right) \Big] d_{e^\pm},$$

$\eta \to \mu^+\mu^-$

- Enough for MC (Geant4), but realistic estimate: how to measure polarization?

$$\mathrm{BR}(\mu^\pm, \lambda \boldsymbol{n}) = \frac{d\Omega}{4\pi} n(x) \left[1 \mp \lambda b(x, x_0) \boldsymbol{\beta} \cdot \boldsymbol{n}\right] dx,$$

with $x = 2E_e/m_\mu \in (0,1)$, $n(x) = 2x^2(3-2x)$ and $b(x) = (1-2x)/(3-2x)$.

- The resulting decay width

$$\frac{d\Gamma}{\Gamma_{\gamma\gamma}} = 2\beta_\mu \left(\frac{\alpha m_\mu}{\pi m_\eta}\right)^2 \Big[|\mathcal{A}|^2 \left(1 + b\bar{b}\left\{\boldsymbol{\beta}\cdot\bar{\boldsymbol{\beta}}\right\}\right) + 2\beta_\mu \tilde{g}_S \left\{ b\bar{b}[(\boldsymbol{\beta}\times\bar{\boldsymbol{\beta}})\cdot\hat{z}] \operatorname{Re}\mathcal{A} - (b\beta_z + \bar{b}\bar{\beta}_z) \operatorname{Im}\mathcal{A}\right\} + \tilde{g}_S^2 \left(1 + b\bar{b}\left\{\beta_z\bar{\beta}_z - \boldsymbol{\beta}_T\cdot\bar{\boldsymbol{\beta}}_T\right\}\right) \Big] d_{e^\pm},$$

- How to measure polarization? Asymmetries!

$$A_L \equiv \frac{N(c_\theta > 0) - N(c_\theta < 0)}{N(\mathrm{all})} = \bar{A}_L = \frac{\beta_\mu}{3} \frac{\operatorname{Im}\mathcal{A}\ \tilde{g}_S}{|\mathcal{A}|^2}, \quad \tilde{g}_S = \frac{-g_S}{2m_\mu \alpha^2 F_{\eta\gamma\gamma}}$$

$$A_T \equiv \frac{N(s_{\phi-\bar{\phi}} > 0) - N(s_{\phi-\bar{\phi}} < 0)}{N(\mathrm{all})} = \frac{\pi\beta_\mu}{36} \frac{\operatorname{Re}\mathcal{A}\ \tilde{g}_S}{|\mathcal{A}|^2},$$

$\eta \to \mu^+\mu^-$

- Enough for MC (Geant4), but realistic estimate: how to measure polarization?

$$\mathrm{BR}(\mu^\pm, \lambda \boldsymbol{n}) = \frac{d\Omega}{4\pi} n(x) \left[1 \mp \lambda b(x, x_0) \boldsymbol{\beta} \cdot \boldsymbol{n}\right] dx,$$

with $x = 2E_e/m_\mu \in (0,1)$, $n(x) = 2x^2(3-2x)$ and $b(x) = (1-2x)/(3-2x)$.

- The resulting decay width

$$\frac{d\Gamma}{\Gamma_{\gamma\gamma}} = 2\beta_\mu \left(\frac{\alpha m_\mu}{\pi m_\eta}\right)^2 \Big[|\mathcal{A}|^2 \left(1 + b\bar{b}\left\{\boldsymbol{\beta}\cdot\bar{\boldsymbol{\beta}}\right\}\right) + 2\beta_\mu \tilde{g}_S \left\{ b\bar{b}[(\boldsymbol{\beta}\times\bar{\boldsymbol{\beta}})\cdot\hat{z}] \operatorname{Re}\mathcal{A} - (b\beta_z + \bar{b}\bar{\beta}_z) \operatorname{Im}\mathcal{A}\right\} + \tilde{g}_S^2 \left(1 + b\bar{b}\left\{\beta_z\bar{\beta}_z - \boldsymbol{\beta}_T\cdot\bar{\boldsymbol{\beta}}_T\right\}\right) \Big] d_{e^\pm},$$

- How to measure polarization? Asymmetries!

$$A_L^H = 0.11\epsilon_1 - 0.04\epsilon_2, \qquad A_L^L = -\operatorname{Im}(2.7(c_{\ell equ}^{(1)2211} + c_{\ell edq}^{2211}) - 4.1 c_{\ell edq}^{2222}) \times 10^{-2},$$

$$A_T^H = -0.07\epsilon_1 - 0.002\epsilon_2, \quad A_T^L = -\operatorname{Im}(1.6(c_{\ell equ}^{(1)2211} + c_{\ell edq}^{2222}) - 2.5 c_{\ell edq}^{2222}) \times 10^{-3},$$

$\eta \to \mu^+\mu^-$

- Enough for MC (Geant4), but realistic estimate: how to measure polarization?

$$\mathrm{BR}(\mu^\pm, \lambda \boldsymbol{n}) = \frac{d\Omega}{4\pi} n(x) \left[1 \mp \lambda b(x, x_0) \boldsymbol{\beta} \cdot \boldsymbol{n}\right] dx,$$

with $x = 2E_e/m_\mu \in (0,1)$, $n(x) = 2x^2(3-2x)$ and $b(x) = (1-2x)/(3-2x)$.

- The resulting decay width

$$\frac{d\Gamma}{\Gamma_{\gamma\gamma}} = 2\beta_\mu \left(\frac{\alpha m_\mu}{\pi m_\eta}\right)^2 \Big[|\mathcal{A}|^2 \left(1 + b\bar{b}\left\{\boldsymbol{\beta}\cdot\bar{\boldsymbol{\beta}}\right\}\right) + 2\beta_\mu \tilde{g}_S \left\{ b\bar{b}[(\boldsymbol{\beta}\times\bar{\boldsymbol{\beta}})\cdot\hat{z}] \,\mathrm{Re}\,\mathcal{A} - (b\beta_z + \bar{b}\bar{\beta}_z)\,\mathrm{Im}\,\mathcal{A}\right\} + \tilde{g}_S^2 \left(1 + b\bar{b}\left\{\beta_z\bar{\beta}_z - \boldsymbol{\beta}_T\cdot\bar{\boldsymbol{\beta}}_T\right\}\right) \Big] d_{e^\pm},$$

- How to measure polarization? Asymmetries!

$$A_L^H = 0.11\epsilon_1 - 0.04\epsilon_2, \qquad A_L^L = -\,\mathrm{Im}(2.7(c_{\ell equ}^{(1)2211} + c_{\ell edq}^{2211}) - 4.1 c_{\ell edq}^{2222}) \times 10^{-2},$$

$$A_T^H = -0.07\epsilon_1 - 0.002\epsilon_2, \quad A_T^L = -\,\mathrm{Im}(1.6(c_{\ell equ}^{(1)2211} + c_{\ell edq}^{2222}) - 2.5 c_{\ell edq}^{2222}) \times 10^{-3},$$

- REDTOP: $10^7 \eta \to \mu^+\mu^-$; Noise: 3×10^{-4}; $\epsilon_{1(2)} \sim 10^{-3(2)}$ and $c_{\mathcal{O}}^{22st} \sim 10^{-2}$

$\eta \to \mu^+\mu^-\gamma$

- For simplicity SM@LO and interference term

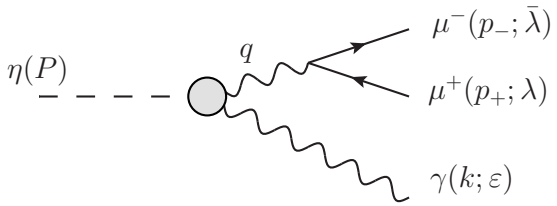

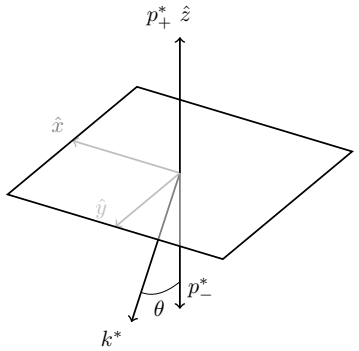

- Along the same steps one finds

$$\frac{d\Gamma_{CP_{\rm H}}}{\Gamma_{\gamma\gamma}} = \frac{\alpha}{\pi}\frac{\text{Im}\,\tilde{F}_{\eta\gamma\gamma^*}(s)\tilde{F}^{CP1*}_{\eta\gamma\gamma^*}(s)}{s}(1-x_\mu)^3 ds dy d_{e^\pm}\left[\sqrt{1-\beta_\mu^2}\sin\theta(b\beta_y - \bar{b}\bar{\beta}_y) - \cos\theta(b\beta_z - \bar{b}\bar{\beta}_z)\right],$$

$$\frac{d\Gamma_{CP_{\rm HL}}}{\Gamma_{\gamma\gamma}} = \frac{\alpha}{\pi}\frac{(1-x_\mu)}{s(1-y^2)}\frac{2\mathcal{C} ds dy d_{e^\pm}}{e^2 m_\eta F_{\eta\gamma\gamma}}\left[\tilde{\alpha}_R\,\text{Re}\,\tilde{F}_{\eta\gamma\gamma^*}(s) + \tilde{\alpha}_I\,\text{Im}\,\tilde{F}_{\eta\gamma\gamma^*}(s)\right],$$

- Richer final state $\to$ additional asymmetries

$$A_{L\gamma} \equiv \frac{N(s_\phi > 0) - N(s_\phi < 0)}{N(\text{all})}, \quad A_{TL} \equiv \frac{N(c_\phi c_{\bar{\theta}} > 0) - N(c_\phi c_{\bar{\theta}} < 0)}{N(\text{all})}.$$

$\eta \to \mu^+\mu^-\gamma$

- For simplicity SM@LO and interference term

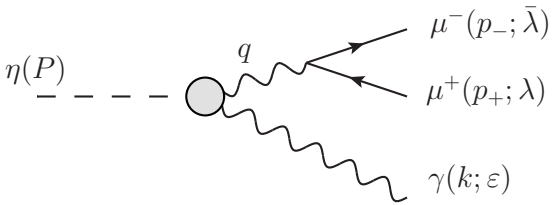

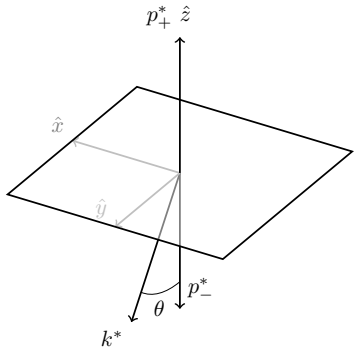

- Along the same steps one finds

$$\frac{d\Gamma_{CP_{\rm H}}}{\Gamma_{\gamma\gamma}} = \frac{\alpha}{\pi}\frac{\mathrm{Im}\,\tilde F_{\eta\gamma\gamma^*}(s)\tilde F^{CP1*}_{\eta\gamma\gamma^*}(s)}{s}(1-x_\mu)^3 ds dy d_{e^\pm}\left[\sqrt{1-\beta_\mu^2}\sin\theta(b\beta_y-\bar b\bar\beta_y)-\cos\theta(b\beta_z-\bar b\bar\beta_z)\right],$$

$$\frac{d\Gamma_{CP_{\rm HL}}}{\Gamma_{\gamma\gamma}} = \frac{\alpha}{\pi}\frac{(1-x_\mu)}{s(1-y^2)}\frac{2\mathcal{C}ds dy d_{e^\pm}}{e^2 m_\eta F_{\eta\gamma\gamma}}\left[\tilde\alpha_R\,\mathrm{Re}\,\tilde F_{\eta\gamma\gamma^*}(s)+\tilde\alpha_I\,\mathrm{Im}\,\tilde F_{\eta\gamma\gamma^*}(s)\right],$$

- Richer final state $\to$ additional asymmetries

$$A_L^H = 0 \qquad A_L^{HL} = -4\,\mathrm{Im}(1.1(c_{\ell equ}^{(1)221}+c_{\ell edq}^{221})-1.7c_{\ell edq}^{2222})\times 10^{-7},$$

$$A_{L\gamma}^H = -0.002\epsilon_1 \qquad A_{L\gamma}^{HL} = 5\,\mathrm{Im}(1.1(c_{\ell equ}^{(1)2211}+c_{\ell edq}^{2211})-1.7c_{\ell edq}^{2222})\times 10^{-6},$$

$$A_{TL}^H = 0 \qquad A_{TL}^{HL} = 2\,\mathrm{Im}(1.1(c_{\ell equ}^{(1)221}+c_{\ell edq}^{221})-1.7c_{\ell edq}^{2222})\times 10^{-5},$$

$$A_T^H = 0 \qquad A_T^{HL} = -5\,\mathrm{Im}(1.1(c_{\ell equ}^{(1)221}+c_{\ell edq}^{221})-1.7c_{\ell edq}^{2222})\times 10^{-6}.$$

$\eta \to \mu^+\mu^-\gamma$

- For simplicity SM@LO and interference term

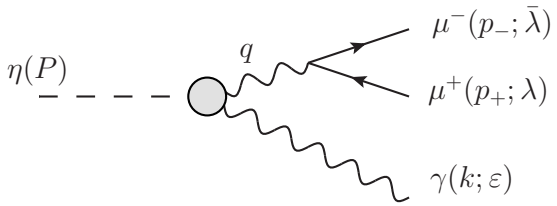

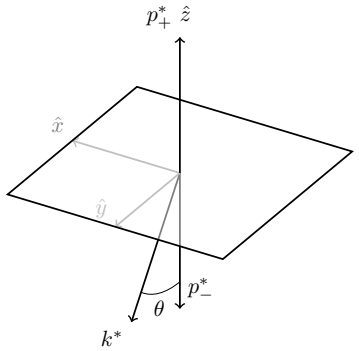

- Along the same steps one finds

$$\frac{d\Gamma_{CP_{\rm H}}}{\Gamma_{\gamma\gamma}} = \frac{\alpha}{\pi}\frac{\text{Im}\,\tilde{F}_{\eta\gamma\gamma^*}(s)\tilde{F}^{CP1*}_{\eta\gamma\gamma^*}(s)}{s}(1-x_\mu)^3 ds dy d_{e^\pm}\left[\sqrt{1-\beta_\mu^2}\sin\theta(b\beta_y - \bar{b}\bar{\beta}_y) - \cos\theta(b\beta_z - \bar{b}\bar{\beta}_z)\right],$$

$$\frac{d\Gamma_{CP_{\rm HL}}}{\Gamma_{\gamma\gamma}} = \frac{\alpha}{\pi}\frac{(1-x_\mu)}{s(1-y^2)}\frac{2\mathcal{C} ds dy d_{e^\pm}}{e^2 m_\eta F_{\eta\gamma\gamma}}\left[\tilde{\alpha}_R\,\text{Re}\,\tilde{F}_{\eta\gamma\gamma^*}(s) + \tilde{\alpha}_I\,\text{Im}\,\tilde{F}_{\eta\gamma\gamma^*}(s)\right],$$

- Richer final state$\to$ additional asymmetries
- REDTOP: $10^9\eta \to \gamma\mu^+\mu^-$; Noise: 3×10^{-5}; $\epsilon_1 \sim 10^{-2}$ and $c_{\mathcal{O}}^{22st} \sim 1$

$\eta \to \mu^+\mu^-\gamma$

- For simplicity SM@LO and interference term

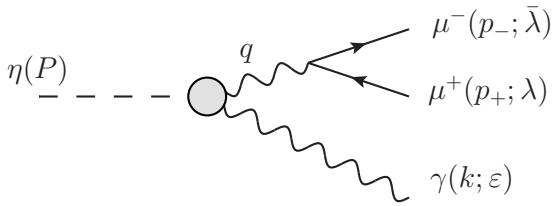

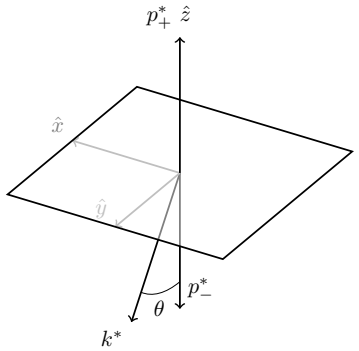

- Along the same steps one finds

$$\frac{d\Gamma_{CP_{\rm H}}}{\Gamma_{\gamma\gamma}} = \frac{\alpha}{\pi}\frac{\text{Im}\,\tilde{F}_{\eta\gamma\gamma^*}(s)\tilde{F}^{CP1*}_{\eta\gamma\gamma^*}(s)}{s}(1-x_\mu)^3 ds dy d_{e^\pm}\left[\sqrt{1-\beta_\mu^2}\sin\theta(b\beta_y - \bar{b}\bar{\beta}_y) - \cos\theta(b\beta_z - \bar{b}\bar{\beta}_z)\right],$$

$$\frac{d\Gamma_{CP_{\rm HL}}}{\Gamma_{\gamma\gamma}} = \frac{\alpha}{\pi}\frac{(1-x_\mu)}{s(1-y^2)}\frac{2\mathcal{C} ds dy d_{e^\pm}}{e^2 m_\eta F_{\eta\gamma\gamma}}\left[\tilde{\alpha}_R\,\text{Re}\,\tilde{F}_{\eta\gamma\gamma^*}(s) + \tilde{\alpha}_I\,\text{Im}\,\tilde{F}_{\eta\gamma\gamma^*}(s)\right],$$

- Richer final state$\to$ additional asymmetries
- REDTOP: $10^9\eta \to \gamma\mu^+\mu^-$; Noise: 3×10^{-5}; $\epsilon_1 \sim 10^{-2}$ and $c_{\mathcal{O}}^{22st} \sim 1$
- As a bonus: SM P-violating asymmetry reassessed 10^{-6} (10^{-2} supression wrt PLB429, 151 (1998) estimate: careful account of μ decay!)

$\eta \to e^+e^-\mu^+\mu^-$

- CP-violation can be accessed without polarization: lepton plane asymmetry

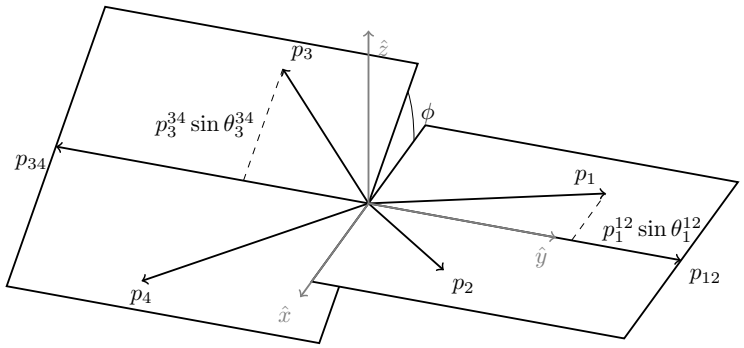

Expressions lengthy but, $\propto \sin\phi\cos\phi$

$$A_{\phi/2} = \frac{N(s_\phi c_\phi > 0) - N(s_\phi c_\phi < 0)}{N(\mathrm{all})},$$

- After integration

$$A^H_{\phi/2} = -0.2\epsilon_1 + 0.0003\epsilon_2, \quad A^{HL}_{\phi/2} = -\,\mathrm{Im}(1.3(c^{(1)2211}_{\ell equ} + c^{2211}_{\ell edq}) - 1.9c^{2222}_{\ell edq})\times 10^{-5}.$$

- REDTOP: $10^6\eta \to e^+e^-\mu^+\mu^-$; Noise : 10^{-4}; $\epsilon_1 \sim 10^{-3}$ and $c^{22st}_{\mathcal{O}} \sim 40$

Summary of sensitivities

Process	$\epsilon_1 \geq$	$\epsilon_2 \geq$	$\mathrm{Im}\{c_{lequ}^{(1)2211}, c_{ledq}^{2211}\} \geq$	$\mathrm{Im}\, c_{ledq}^{2222} \geq$
$\eta \to \mu^+\mu^-$	3×10^{-3}	8×10^{-3}	10^{-2}	7×10^{-3}
$\eta \to \gamma\mu^+\mu^-$	0.15	-	14	10
$\eta \to e^+e^-\mu^+\mu^-$	3×10^{-3}	2	40	25

- For CP_H scenario
  Stronger bounds for ϵ_1 (ϵ_2 only for 2 offshell photons)
  Stronger bounds from dilepton and double-Dalitz decays
- For CP_{HL} scenario
  Only relevant for dilepton decays (tree vs. loop, helicity suppression)
- Can we set stronger bounds for these parameters? ~~heavy atoms~~neutron EDM

$$\Gamma^\mu = \gamma^\mu F_1(q^2) + \frac{i\sigma^{\mu\nu}q_\nu}{2m_\ell}F_2(q^2) - \frac{\sigma^{\mu\nu}q_\nu}{2m_\ell}\gamma^5 F_E(q^2) + (q^2\gamma^\mu - \not{q}q^\mu)\gamma^5 F_A(q^2),$$

$$e\Gamma^\mu A_\mu^{\mathrm{cl}} \overset{\mathrm{NR}}{=} \mathcal{Q}V - \mu\boldsymbol{\sigma}\cdot\boldsymbol{B} - d\boldsymbol{\sigma}\cdot\boldsymbol{E}, \quad \mathcal{Q} = eF_1(0) \quad \mu = \frac{e\hbar}{2m_\ell}(F_1(0)+F_2(0)), \quad d = \frac{e\hbar}{2m_\ell c}F_E(0)$$

Section 3

nEDM bounds

nEDM in the CP$_H$ scenario

- Keep things simple: among other things, this contribution would appear

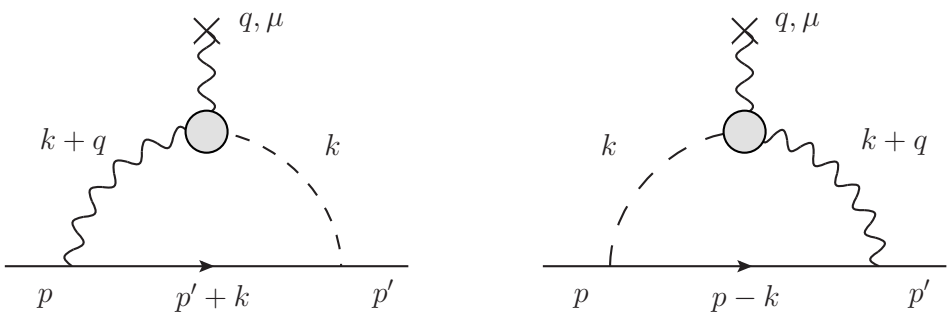

- Taking $\eta\bar{N}N$ from χPT and assuming on-shell Dirac and Pauli $\gamma^*\bar{N}N$ FFs

$$F_E(0) = \epsilon_1 F_{\eta\gamma\gamma}\frac{g_{\eta NN}}{6F_\eta}\frac{\alpha}{\pi}\int_0^\infty dK^2\,\frac{K^2}{K^2+m_{\eta^2}}\tilde{F}^{CP1}_{\eta\gamma^*\gamma^*}(-K^2,0)(1-\beta)$$
$$\times\left(F_2(-K^2)\frac{3K^2}{16m_N^2}(3-\beta) - F_1(-K^2)\left[1+(1+\beta)^{-1}\right]\right)$$

- We obtain $d_E^n = -6.2\times 10^{-20}\epsilon_1\, e\,\mathrm{cm}$ vs $d_E^{n\ \mathrm{Exp}} \leq 3\times 10^{-26}\, e\,\mathrm{cm}$
- Thereby $\epsilon_1 \leq 5\times 10^{-7}$, to be compared with found sensitivities $\epsilon_1 \sim 10^{-3}$

Cannot measure hadronic-driven CP-violating effects in η muonic decays

nEDM in the CP_{HL} scenario

- More complex: 2-loop effects and account for renormalization

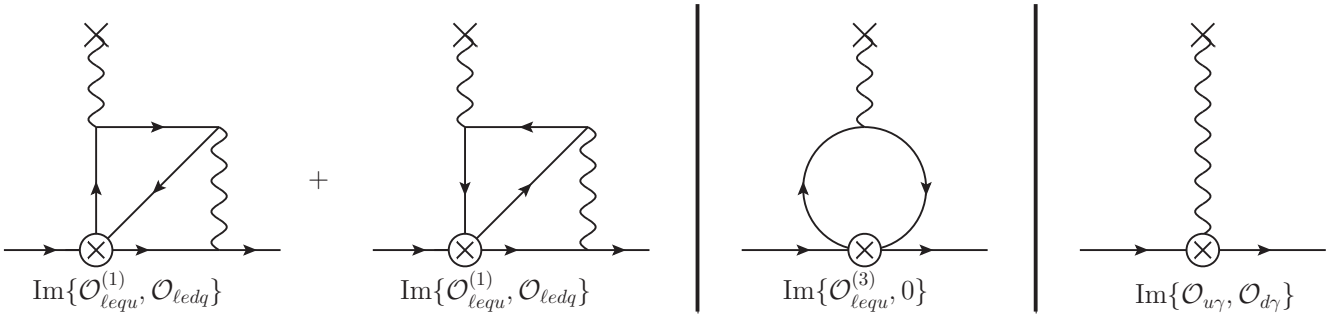

nEDM in the CP_{HL} scenario

- Concerning nucleons: formidable task $\rightarrow$ approximate

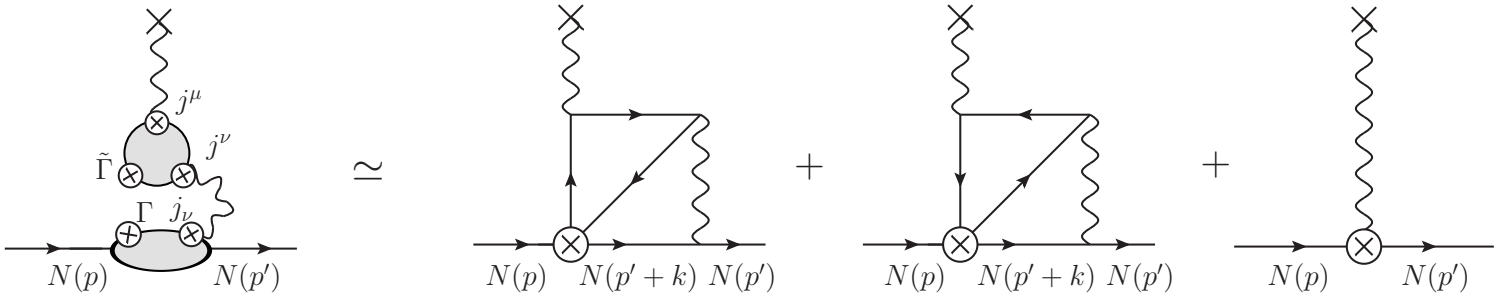

- Low energy via intermediate nucleon state
  P current: π, η, η'-dominated and χPT
  S current: σ terms + resonance saturation

$$d_E^n = \mathrm{Im}(-0.75 c_{\ell equ}^{(1)2211} + 0.92 c_{\ell edq}^{2211} + 0.08 c_{\ell edq}^{2222}) \times 10^{-23}$$

- High energy via the operator product expansion
  $\Gamma_{\mu\nu}(\ell) T\{j^\nu(x) S(P)(0)\} \xrightarrow{x \to 0} \bar{q}\sigma^{\mu\nu}\gamma^5 q$
  Assume 0 at EW, then (RG) + lattice $\langle n | \bar{q}\sigma^{\mu\nu}\gamma^5 q | n \rangle$

$$d_E^n = \mathrm{Im}(-0.59 c_{\ell equ}^{(1)2211} + 0.15 c_{\ell edq}^{2211} + 0.001 c_{\ell edq}^{2222}) \times 10^{-23}$$

nEDM in the CP_{HL} scenario

- Concerning nucleons: formidable task $\rightarrow$ approximate

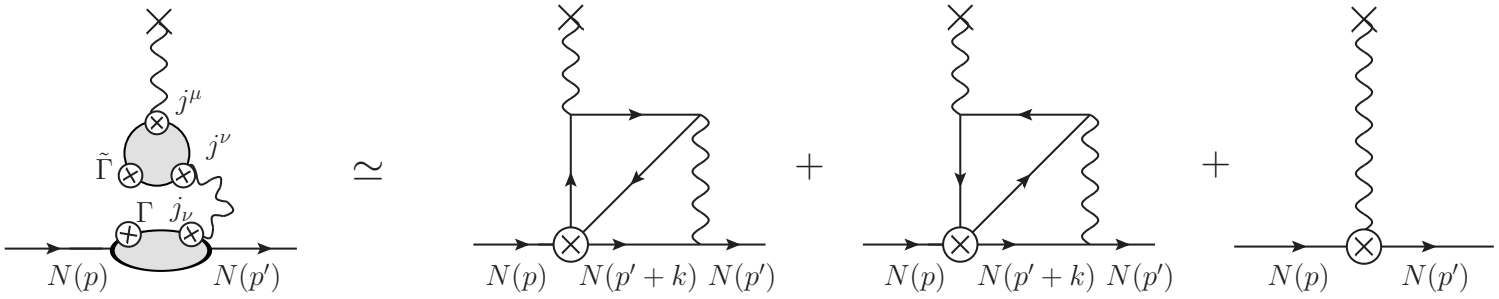

- Altogether we find (take it as an order of magnitude)

$$\mathrm{Im}\, c^{(1)2211}_{\ell equ} < 0.002, \qquad \mathrm{Im}\, c^{2211}_{\ell edq} < 0.003, \qquad \mathrm{Im}\, c^{2222}_{\ell edq} < 0.04. \tag{1}$$

- To be comapred with $\eta \rightarrow \mu^+\mu^-$

$$\mathrm{Im}\, c^{(1)2211}_{\ell equ} < 0.01, \qquad \mathrm{Im}\, c^{2211}_{\ell edq} < 0.01, \qquad \mathrm{Im}\, c^{2222}_{\ell edq} < 0.007. \tag{2}$$

CP-violation possible + Competitive bounds for $\mathrm{Im}\, c^{2222}_{\ell edq}$ **Wilson Coefficient**

$D_s^+ \to \mu^+\nu$

- The SMEFT [$SU(3)\times SU(2)\times U(1)$ symmetry] also has implication for CC

$$\mathcal{O}^{(1)}_{\ell equ} = \frac{c^{(1)prst}_{\ell equ}}{v^2}(\bar{\ell}^j_p e_r)\epsilon_{jk}(\bar{q}^k_s u_t) \to -\frac{\mathrm{Im}\, c^{(1)2222}_{\ell equ}}{2v^2}\left[(\bar{\nu} i\gamma^5\mu)(\bar{s}c) + (\bar{\nu}\mu)(\bar{s}i\gamma^5 c)\right]$$

$$\mathcal{O}_{\ell edq} = \frac{c^{prst}_{\ell edq}}{v^2}(\bar{\ell}^j_p e_r)(\bar{d}_s q^j_t) \qquad \to \frac{\mathrm{Im}\, c^{2222}_{\ell edq}}{2v^2}\left[(\bar{\nu} i\gamma^5\mu)(\bar{s}c) - (\bar{\nu}\mu)(\bar{s}i\gamma^5 c)\right]$$

- This produces an additional contribution to the SM prediction

$$\mathrm{BR}(D_s^+ \to \mu^+\nu) \propto f^2_{D_s} G_F^2 |V_{cs}|^2 \left|1 + \frac{m^2_{D_s}(c^{(1)2222}_{\ell equ} - c^{2222}_{\ell edq})}{2|V_{cs}|m_\mu(m_c+m_s)}\right|^2 = 5.50(23)\times 10^{-3}$$

- Contribution fo the order $|\mathrm{Im}\, c_i^{2222}| \leq 0.02$

CP-violation still possible!

Conclusions and Outlook

- Investigated CP-violation in $\eta \to \mu^+\mu^-, \mu^+\mu^-\gamma, e^+e^-\mu^+\mu^-$ decays
- Assumed heavy physics $\to$ SMEFT: hadronic/lepton-quark scenarios
- Estimated sensitivities for REDTOP and amplitudes for MC
- Stringent bounds from nEDM $\to$ only $\mathcal{O}^{2222}_{ledq}$ plausible

- Lepton origin seems irrelevant due to ℓ EDMs, but might check $\mathcal{O}_{\ell e}$
- $\eta \to \pi^+\pi^-\mu^+\mu^-$ not studied, but apriori irrelevant
- $\eta \to \mu^+\mu^-\pi^0$ might be interesting since tree vs loop level
- A serious calcualtion for the EDM (hadronic model, full RG...)

Section 4

Backup

Some details on the OPE and large logs

- The nEDM from the loop integral (exact)

$$\bar{u}_{p'}\Gamma^{\mu}u_p = e^2\sum_i\int\frac{d^4k}{(2\pi)^4}\frac{1}{k^2}\left[\frac{1}{i}\int e^{ik\cdot z}\langle N_{p'}|\,T\{j_\nu(z)(\bar{q}\Gamma_i q)(0)\}\,|N_p\rangle\right]$$
$$\times\left[\frac{1}{i}\int e^{-i(q\cdot x+k\cdot y)}\langle 0|\,T\{j^\mu(x)j^\nu(y)(\bar{\ell}\tilde{\Gamma}_i\ell)(0)\}\,|0\rangle\right]$$
$$\equiv e^2\sum_i\int\frac{d^4k}{(2\pi)^4}\frac{1}{k^2}\Pi^{\rho}_{NNV\Gamma_i}(-k,k+q)\Pi^{\mu\nu}_{VV\tilde{\Gamma}_i}(k,q)g_{\nu\rho}, \tag{3}$$

- The RG large-logs from cut-off regularization $\infty\to\Lambda$

$$F_E^q(0) = \frac{\alpha}{\pi}\frac{G_F m_\ell m_q}{6\sqrt{2}\pi^2}\mathcal{Q}_q\int_0^\infty\frac{dKK}{m_q^2\beta_\ell}\left[\left(\beta_q-\frac{2}{1+\beta_q}\right)\left[\frac{1+\beta_\ell^2}{2\beta_\ell}\ln\left(\frac{\beta_\ell+1}{\beta_\ell-1}\right)-1\right]\right.$$
$$\left.\pm\left(\frac{2\beta_q^2}{1+\beta_q}-1\right)\ln\left(\frac{\beta_\ell+1}{\beta_\ell-1}\right)\right]\mathrm{Im}\,c_{\ell equ(dq)} \tag{4}$$
$$\to\frac{\alpha}{\pi}\frac{G_F m_\ell m_q}{6\sqrt{2}\pi^2}\left\{\mathrm{Im}\,c^{(1)}_{\ell equ}(\ln^2\Lambda^2-\ln\Lambda^2),\mathrm{Im}\,c_{\ell edq}\ln\Lambda\right\}. \tag{5}$$